Mecca 240V
7-Bar Heated Towel Ladder

Nero

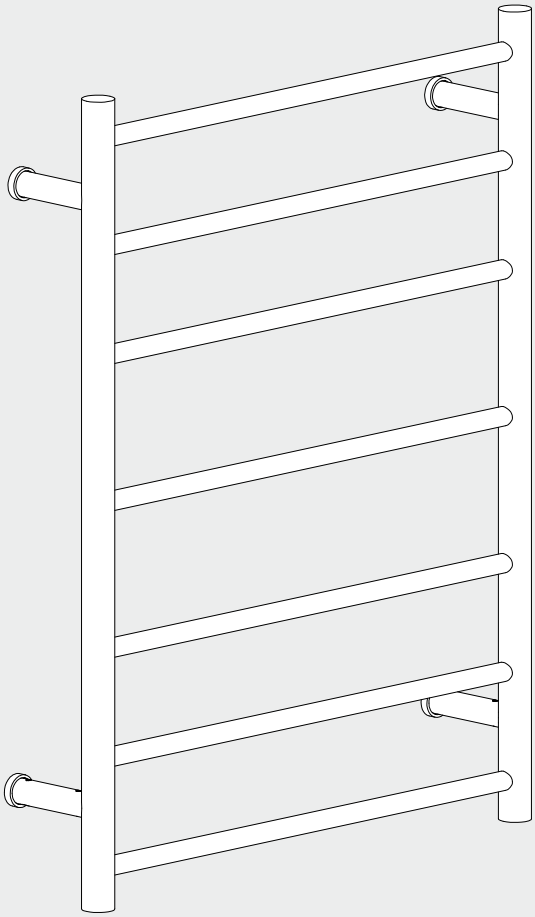

Version:202501

Drawing

Unit:mm
230V 80W

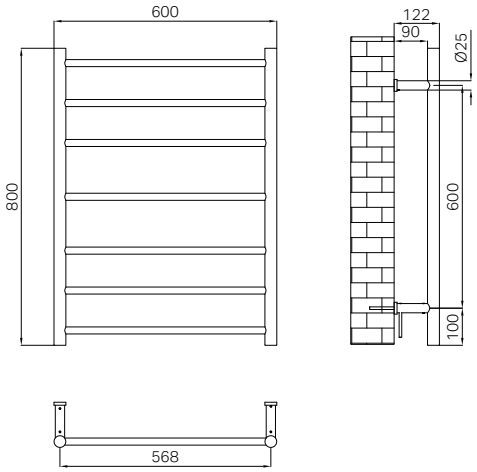

Specifications

Certification
SAA
Voltage
220-240V/50-60Hz
Power Rating
80W Ip55
Appliance Class
Class I

Packaging Includes

1x Heated Towel Ladder
(Including a 1.5m power cord)
1x Connection Wire Leg Kit

Finish & SKU

Brushed Bronze
NR190003hBZ

Graphite
NR190003hGR

Chrome
NR190003hCH

Matte Black
NR190003hMB

Brushed Gold
NR190003hBG

Brushed Nickel
NR190003hBN

Gun Metal
NR190003hGM

*Dimensions are nominal measurements only.

Safety, Installation, and Care Information

Safety and Installation:

- This 240V heated towel rail must be installed and tested by a qualified electrician in accordance with current local electrical and building regulations.
- Mount the rail on a flat, uniform wall with the base installed at least 600mm above the floor to reduce the risk of accidental contact, particularly by children.
- It is essential that the towel rail is connected to a suitably rated Residual Current Device (RCD) circuit to enhance safety.
- In wet areas, strictly adhere to all electrical guidelines. Avoid installing the rail in locations subject to direct water spray or excessive moisture. It should not be mounted within the shower zone or immediately adjacent to bathtubs and sinks unless additional protective measures, such as splash guards, are implemented.
- When fixing to hollow walls, ensure that suitable anchors are used for a secure installation.
- Do not cover the towel rail with non-ventilating materials (e.g., plastic or waterproof covers), as this could lead to overheating and an increased fire risk.
- Regularly inspect the power cord for signs of damage. If any damage is detected, have the cord replaced immediately by an approved service agent or qualified professional.
- Do not use the towel rail to hang items contaminated with oil, petroleum-based products, or dry cleaning fluids, as these substances can elevate fire risks.
- Never immerse the towel rail in water or any other liquid.
- Ensure that the electrical supply is strictly 240V, 50Hz to avoid potential hazards.

Care Information:

- Always disconnect the power before cleaning the towel rail.
- Clean the unit using a soft, damp cloth with a non-abrasive cleaning agent to preserve the finish. Avoid harsh scrubbing, acidic cleaners, or abrasive products that may damage the surface.
- Periodically check all mounting and electrical connections, and ensure that the unit is well-ventilated to maintain optimal performance and longevity.

Parts Names

① Towel Ladder x 1

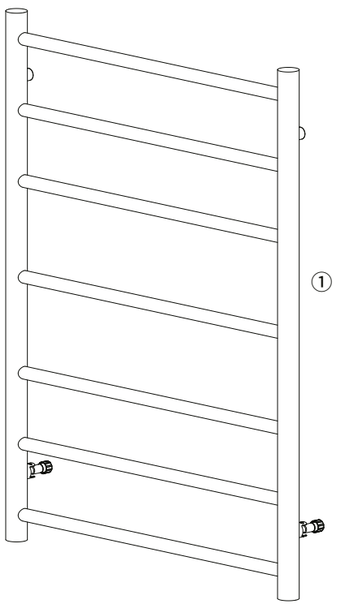

② Upper Support Leg x2

③ Lower Support Leg x1

④ Open Support Leg x1

⑤ Concealed Support Leg x1

⑥ Mounting Bracket x3

⑦ Mounting Bracket x1

⑧ Expansion Screw x4

⑨ Expansion Plug(E type) x4

⑩ Grub Screw x8

⑪ Cross Recessed Pan Head Screw x2

⑫ Ball Head Allen Key x1

⑬ Power Cord With Australia Plug x1

⑭ Concealed Power Cord x1

Nero Heated Towel Rail/Ladder– 240V IP55 Installation

This guide follows the AS/NZS 3000:2018 standard and outlines where a 240V IP55 heated towel rail/ladder can be safely installed in a bathroom.

Understanding IP Ratings

All electrical fixtures in bathrooms must meet certain Ingress Protection (IP) ratings to ensure safety.

- IP55 means:
  - "5" (Dust Protection) – Limited protection against dust; enough to prevent damage to internal components.
  - "5" (Water Protection) – Can withstand low-pressure water jets from any direction (equivalent to IPX5).

Installation Zones for 240V IP55 Heated Towel Rails/Ladders

Our 240V IP55 heated towel rail/ladder is suitable for installation outside Zone 1 in accordance with AS/NZS 3000:2018. Always check with a qualified electrician to ensure compliance with local regulations and site-specific conditions.

Important Safety Notes

- All electrical work must be performed by a licensed electrician.
- Hardwiring is required.
- All circuits must be protected by a 30mA RCD to ensure user safety.

For more details, please contact support@nerotapware.com.au or call +61 387863170

Installation Steps

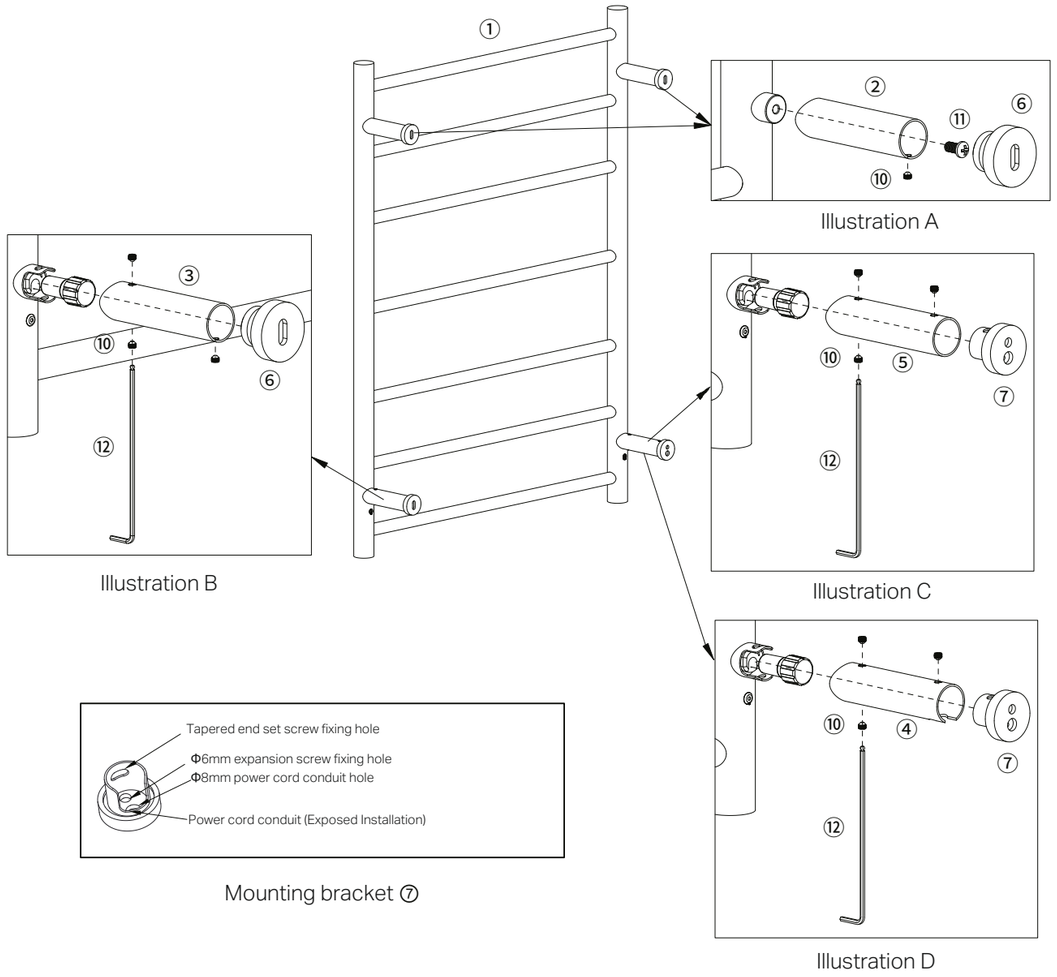

Step 01

The upper support tube installation follow Illustration A: assemble the ②to the nut seat on the back of the ①with the ⑪, tap the ⑥to the ②and secure it with the ⑩.

The lower support tube installation follow Illustration B: fit the ③to the cylindrical fixing seat underneath the ① and secure it with the ⑩ using ⑫. Tap the ⑥ into the ③, and secure it with the ⑩.

For concealed installation, follow Illustration C: Fit the ⑤to the cylindrical fixing seat at the bottom of the ①. Then, tap the ⑦ into the ⑤, and secure ⑦with ⑩.

For exposed installation, follow illustration D : Follow the same steps with concealed installation except replace ⑤ with ④.

Note:

- The towel ladder can be wired for power on both the left and right sides below. During installation, it is recommended to connect the wiring for power on the side near the control box.
- This manual selects the wiring for power on the lower left side of the product as a demonstration.

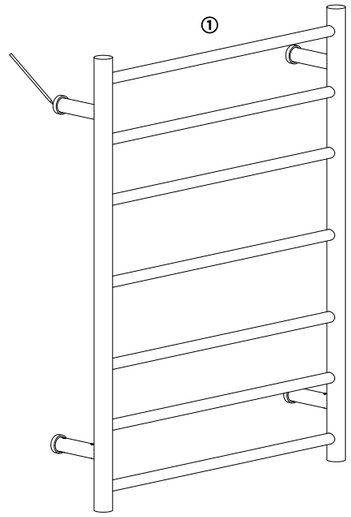

Step 02

Place the towel ladder ① squarely against the wall and draw the outline of the four bases individually with a wipeable marker to mark the mounting positions.

Step 03

Pull out the mounting brackets ⑥⑥⑦⑥ from the towel rail, and align them sequentially with the outlines drawn on the wall perfectly.
For concealed installation: mark the drilling position of the expansion plug and passage hole of power cord.
For exposed installation: mark the drilling positions of the expansion screws only.

Step 04

Use a φ8 drill bit to drill holes at the marked position. The recommended depth for the mounting hole is 50mm, while the passage hole should go through the wall for concealed installation.

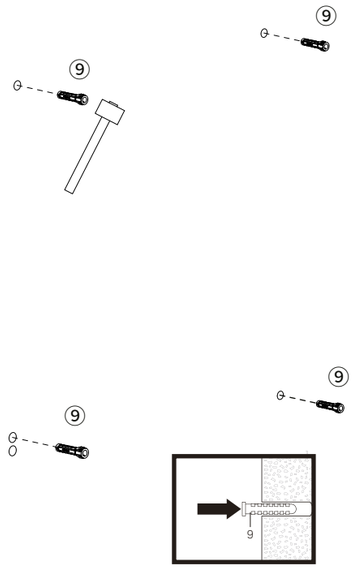

Step 05

Tap the expansion plugs ⑨ into the mounting holes sequentially, flush them with the wall surface.

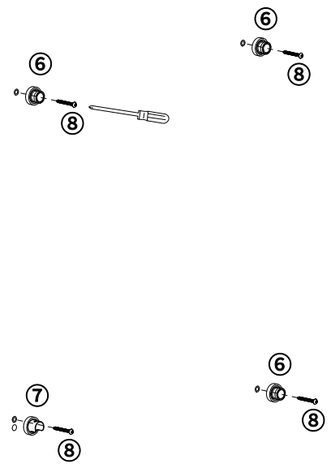

Step 06

Secure the mounting brackets ⑥⑥⑦⑥ to the expansion plugs sequentially with expansion screws ⑧.

Note: The notch of mounting bracket ⑦ must align in the same direction as the notch of the ④.

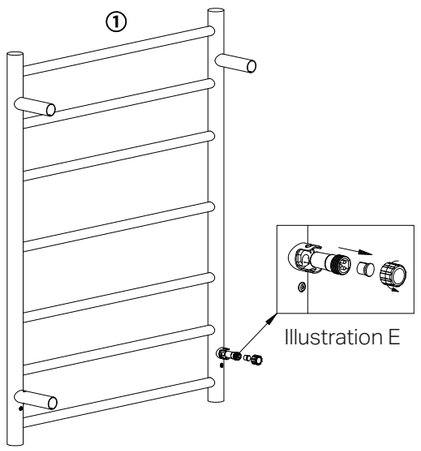

Step 07

Unscrew the male connector nut of the towel ladder where the wiring is needed (Illustration E) and remove the protective plug.

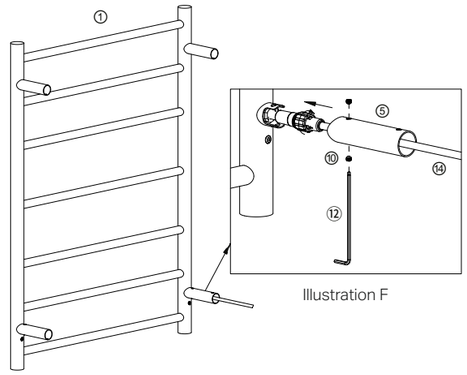

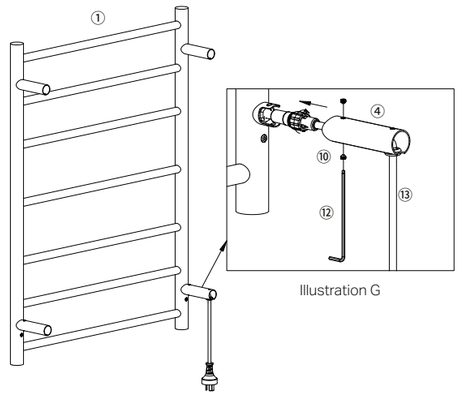

Step 08

For concealed installation, follow Illustration F : Unscrew the ⑩ and pull out the ⑤. Then, connect the female end of ⑭ to the male connector on the back of the towel ladder passing through ⑤, and connect the other end to the controller near the towel ladder passing through the power cord passage hole . Screw the male connector nut, and reinstall the ⑤ onto the towel ladder .

For exposed installation : Follow the same steps as for concealed installation, except securing the cord loop at the notch of ④ and passing the power cord through the notch, instead of passing it through the passage hole in the wall.

Note: Do not perform this step with the power on !

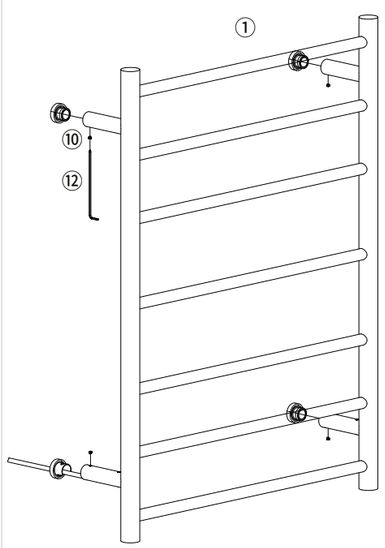

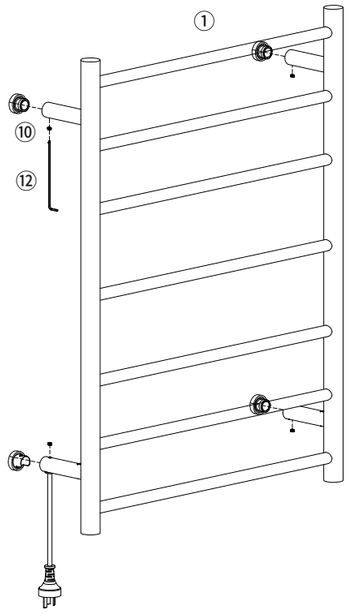

Step 09

Slide the towel ladder onto the wall-mounted bases, secure the towel ladder onto the bases with ⑩.

The heated towel ladder installation is now complete.

Nero

25 YEARS WARRANTY

25

25 YEARS WARRANTY