CAROMA

LIANO II HEATED TOWEL RAIL LADDER

INSTALLATION INSTRUCTIONS

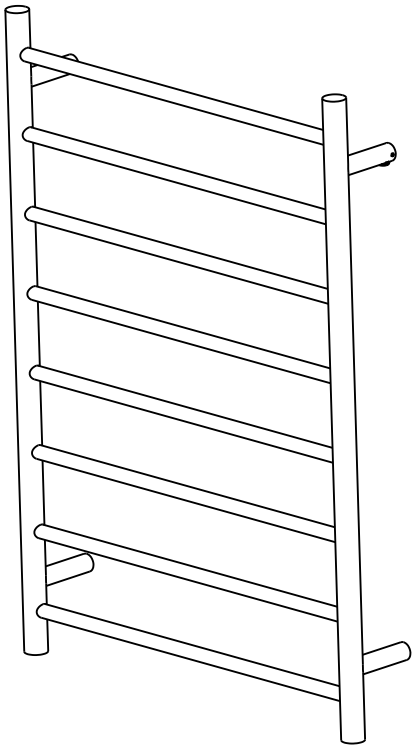

11225051

IS2115A(6/25)

SAFETY INFORMATION

Please read and understand this installation guide in full before commencing installation.

Caroma Heated Towel Rails must be installed and tested by a qualified electrician and in accordance with AS/NZS 3000.
We recommend that the rail is installed onto a flat uniform wall at least 600mm from the floor and with a 300mm clearance from permanent fixtures. Where possible the Caroma Heated Towel Rail should be screwed into studs or if fixing to hollow walls, suitable anchors should be used to ensure rail is secure.

- Observe and adhere to electrical guidelines and IP ratings when placing your Caroma Heated Towel Rail in wet areas.
- Ensure timers or switches (not supplied) used are installed in correct zones according to the IP rating of the timer/switch.
- Ensure that your Caroma Heated Towel Rail is protected by a suitably rated RCD circuit.
- Do not use your Caroma Heated Towel Rail to hold towels or other articles that have been in contact with oil, petroleum-based products or dry cleaning fluids.
- This rail is intended to warm and dry towels and therefore is hot to touch. Close supervision is neccessary when children or infirm persons are near the rail.
- Do not immerse your Caroma Heated Towel Rail in any liquid.
- This rail is not intended for use by persons (including children) with reduced physical, sensory or mental capabilities, or lack of experience and knowledge, unless they have been given supervision or instruction concerning use of the appliance by a person responsible for their safety.
- If the supply cord is damaged, it must be replaced by Caroma, its service agent or similarly qualified persons in order to avoid a hazard.
- Children should be supervised to ensure they do not play with the rail.
- Switch off the electrical supply at the mains before installation and maintenance.
- A means of disconnection must be incorporated in the fixed wiring in accordance with the AS/NZS 3000 wiring rules. For complete control a wall mounted timer (with “off” position) is recommended (not supplied).
- This rail is suitable for bathroom and non-bathroom/dry areas.
- This rail is not suitable for above baths, nor for installation in saunas, steam rooms or shower cubicles.
- This rail is rated IP55 and suitable for indoor use only. Do not fix to damp or conductive surfaces. Site well away from curtains and fabrics.
- If not being used for an extended period of time switch rail off.

FOR SAFETY, PLEASE DO NOT USE FOR ANY PURPOSE OTHER THAN AS A TOWEL RAIL AND A TOWEL WARMER. TO AVOID DAMAGE DO NOT SIT, STAND, LEAN OR HANG ON PRODUCT.

SPECIFICATIONS

Overall width	632mm
Overall height	900mm
Overall depth	116mm
Voltage	230V - 240V AC / 50Hz
Power	68W
IP rating	IP55
Wiring positions	Top or bottom, LHS or RHS

COMPONENTS SUPPLIED

- Heated Towel Rail
- AC wiring lead 1.4m with mains AC plug
- Leg Kit including:

A - 2 x Non-Wired mounting tubes
B - 2 x Wired mounting tube no slot
C - 1 x Wired mounting tube with slot
D - 1 x Wired mounting tube with slot on reverse side
E - 1 x Black nylon mounting lug
F - 3 x Aluminium mounting lugs (Supplied inside the leg)
G - 4 x Wall Plugs
H - 4 x M4 self tapping countersunk screws
I - 2 x M5 socket cap screws
J - 2 x M4 pan head screws
K - 4 x Grub screws (Supplied inside the leg)
L - 1 x Allen Key
M - 1 x Rubber grommet (fitted to AC lead)
N - 4 x Silicon tube seals

TOOLS REQUIRED

Tape measure, spirit level, drill, Phillips head screwdriver, 4mm allen key, hammer, 7mm tile drill bit, and 7mm normal drill bit, 3mm normal drill bit (if fixing to a noggin/stud), pencil, masking tape

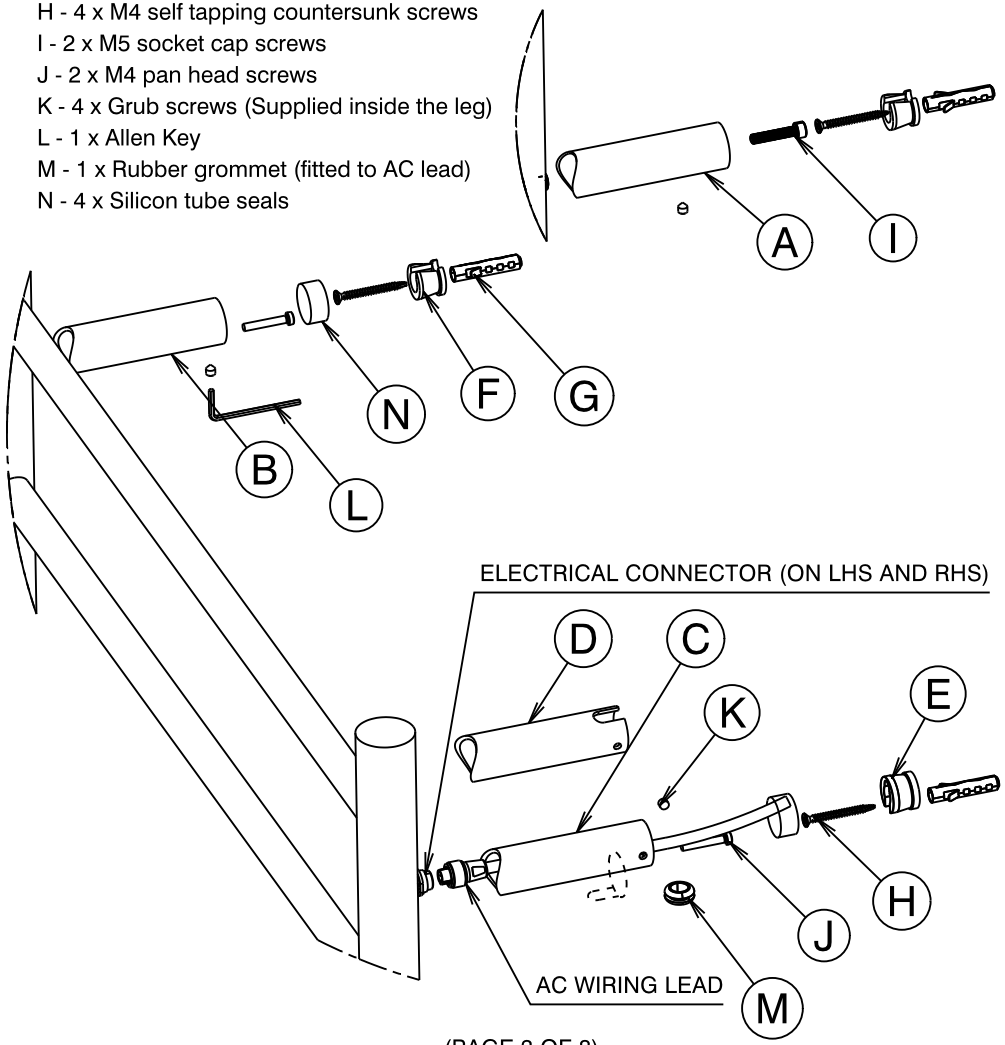

INSTALLATION

STEP 1 - Wall preparation
Wall plug (G) is only suitable for use in cavity walls with a tiled surface and masonry walls. If installing into a plasterboard cavity wall (untiled) it is recommended that the rail be attached to the wall in line with a stud or noggin using suitable screws. Fixing into plasterboard or cement sheeting alone is NOT recommended. Provisions must be made for a supply wire to feed through the wall to the preferred mounting location for the heated towel rail. If fastening to noggin, wires routed through noggins must avoid contact with mounting screw (see diag 1).

Diag 1

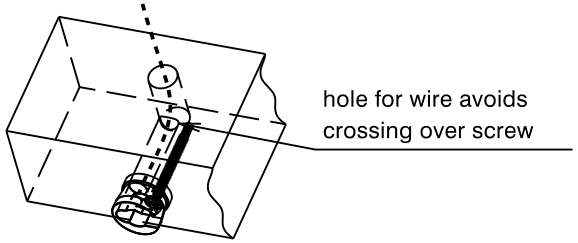

STEP 2 – Attach mounting tubes
Decide which location to connect the electrical supply to. This can be anyone of the four locations where the rail connects to the wall. The rail has electrical connectors on the LHS and RHS and the wiring connection point can be moved to the top or bottom by rotating the rail 180˚. It is recommended that the wiring connection point be at the top.

Remove the mounting lugs (F) from inside the tubes by releasing the grub screws with the allen key provided. Attach the two non-wired mounting tubes (A) to the rail using the M5 socket cap screws (I) and a 4mm allen key at the locations that don't have the electrical connection (see diag 2). Attach a wired mounting tube without slot (B) to the wired point on the rail that will not be connected to power with an M4 machine screw (J) and a Phillips head screwdriver (see diag 3). Take three silicon tube seals (N) and insert them inside the tubes about 20mm. Attach another wired mounting tube without slot (B) to the fourth position for marking purposes. This will need to be removed after STEP 3 so don't insert the silicon seal.

Diag 2

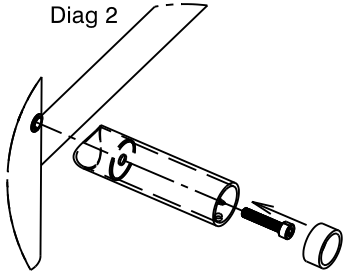

Diag 3

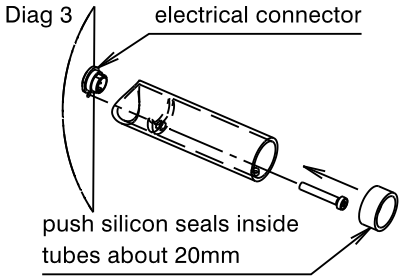

STEP 3 - Plan and measure
Mark out the four wall mounting lug positions making sure they are level. The rail should be installed so that the lowest heated rail is at least 600mm above the floor. For tiled walls avoid postioning mounting lugs on grout lines. Put some masking tape at the location of the four mounting lug positions and then hold the rail against the wall and once it is straight and level mark the four leg footprints on the tape. The tape will prevent the drill bit from wandering.

For the three non wired mounting positions mark the screw hole position in the centre of the footprint. For the wire mounting position place the nylon mounting lug (E) in the centre of the footprint and mark the two hole positions using it as a template. For hard wired installations the holes need to side by side. For exposed wire installation the lug must be oriented with the holes vertically aligned but only the lower hole is drilled. After marking is complete remove the wired mounting tube without slot (B) from the wiring connection point.

STEP 4 – Installation of wall mounting lugs
Drill a Ø7mm hole in the centre of each of the three marked non -wired mounting positions. Drill hole through the tile only with tile drill bit then drill the plasterboard slowly with a normal drill bit to avoid damage to the plasterboard. Insert the wall plugs (G) provided. Tap in lightly until flush with the tile. If fixing direct to noggin the wall plug is not required and a Φ3mm hole should be drilled into the noggin instead.

Now fix the three aluminium wall mounting lugs (F) in place using the countersunk screws (H) and a Phillips head screwdriver (diag 4). Ensure the lug is rotated correctly so the slot is on the opposite side to which the grub screws (K) fasten. In the fourth position drill a Ø7mm cable hole and Ø7mm hole (or Φ3mm hole if screwing into noggin) for the nylon wiring mounting lug (E) (see diag 5a/b). Note that the cable hole is not required for exposed wire installation (see diag. 5b). Fix the nylon mounting lug (E) in place using the wall plug (G) provided and the countersunk screw (H).

Diag 4

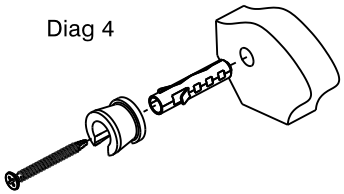

Diag 5a - Hard wired

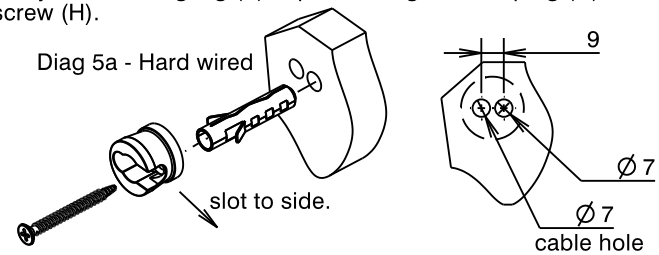

Diag 5b - Exposed wire

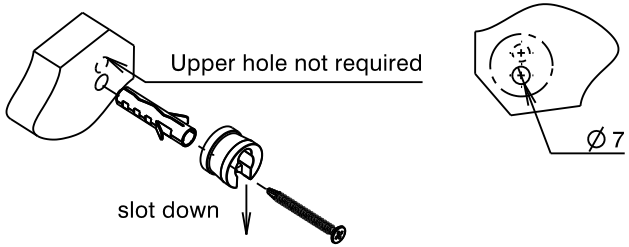

STEP 5 – Connect power lead
For hidden wire installation:
Slide the mounting tube without slot (B) over the AC cable. Connect the AC power lead to the rail at your chosen position by unscrewing the screw cap, inserting the lead into the electrical connector (see diag 6) ensuring that the pins align correctly using the arrows marked and tighten the screw collar. Fix the mounting tube in place using an M4 machine screw (J).

For exposed wire installation:
Slide one of the mounting tubes with the slot (C,D) over the AC cable (see diag. 7). The choice depends on whether the wiring position is at the top or the bottom. The slot must be underneath when the tube is fastened to the rail. Insert the AC cable into the electrical connector. Fix the tube in place using the M4 screw (J) and screwdriver. Route the AC cable through the slot underneath the tube ensuring the rubber grommet (M) is positioned in the slot to protect the cable.

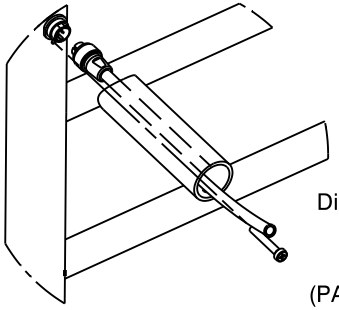

Diag 6

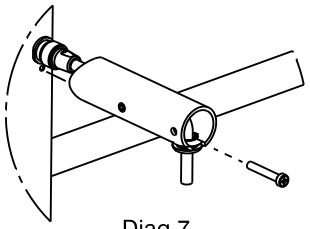

Diag 7

STEP 6 – Connect to mains supply

The towel rail must be installed with an electrical wall isolation switch (not supplied) and must be clearly labelled to identify and control the towel rails.

For hidden wire installation:
Ensure the mains power supply is switched off before attempting to carry out any electrical work. Cut off the mains AC plug and discard the grommet (M). Take the remaining silicon tube seal (N) and push out the centre hole using a screwdriver. Silde the seal over the cable and insert approx 20mm inside the tube. Slide the exposed end of the mains cable into the cable hole in the nylon wall mounting lug (E) (see diag 8). Connect to the mains supply in accordance with electrical regulations. Means of disconnection must be incorporated in the fixed wiring in accordance with the wiring rules. Ensure you have 240V power at the connection point between your Caroma Heated Towel Rail and the mains supply. Dont turn the power on until the rail is fixed to the wall.

For exposed wire installation:
Plug the mains AC plug into a nearby 240V GPO. Ensure you have 240V power at the power point (GPO) to which the rail is being plugged into. Dont turn the power on until the rail is fixed to the wall.

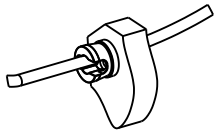

Diag 8

STEP 7 – Fix to wall
Fit the Caroma rail to the mounting lugs installed on the wall. You may need assistance to hold the rail in place. Tighten using the grub screws (K) with the allen key provided (L) (see diag 9).

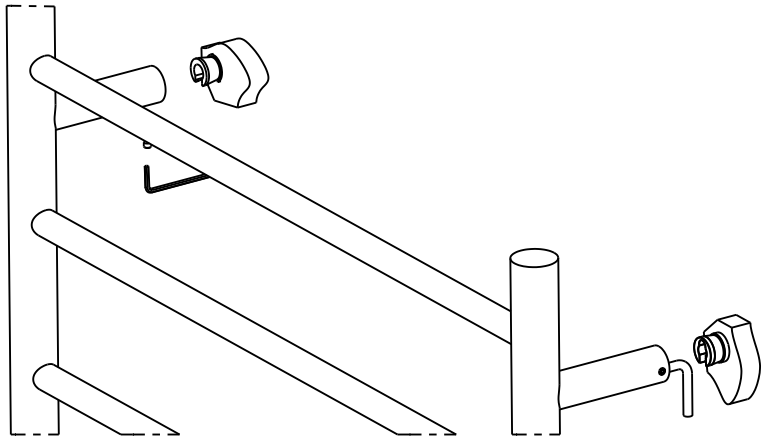

Diag 9

OPERATION AND MAINTENANCE

• After installation, connect the electric power and turn on the wall switch. The Caroma Heated Towel Rail will start to work. Turn off the power wall switch when Caroma heated Towel Rail is not in use.
• The finish of your Caroma Heated Towel Rail is hard wearing and easy to maintain however any harsh scrubbing, scratching or acid based cleaning products will damage the surface. Cleaning with a soft cloth and a non-abrasive cleaning agent will give the best results
• Periodically check the Caroma Heated Towel Rail is fastened securely to the wall, tighten grub screws if necessary
• This heated towel rail has been designed to run continuously if required.
Note: The surface temperature is high when the heated towel rail operates. PLEASE BE CAREFUL!

PLEASE NOTE:

• The heated towel rail in this installation guide is a dry element electric heated towel rail. Electric heated towel rails are designed to run on a low wattage and will heat up quickly, with warmth being felt within 5-10mins.
• The towel rail will reach optimum operating temperature in approx. 30mins. Running temperature of the Electric Heated Towel Rail is approx. 40 degrees without a towel on the rail.
• Once a towel has been placed on the towel rail this will insulate it and beneath the towel it will get to 50-55 degrees. Although the towel rail will reach optimum operating temperature in approx. 30mins the time taken to dry the towel will vary depending on a number of factors including the ambient room temperature, size of the towel rail, number of towels and the dampness level of the towels.
• Electric heated towel rails are designed to dry and gently warm a towel and are not designed as a towel heater or room heater.
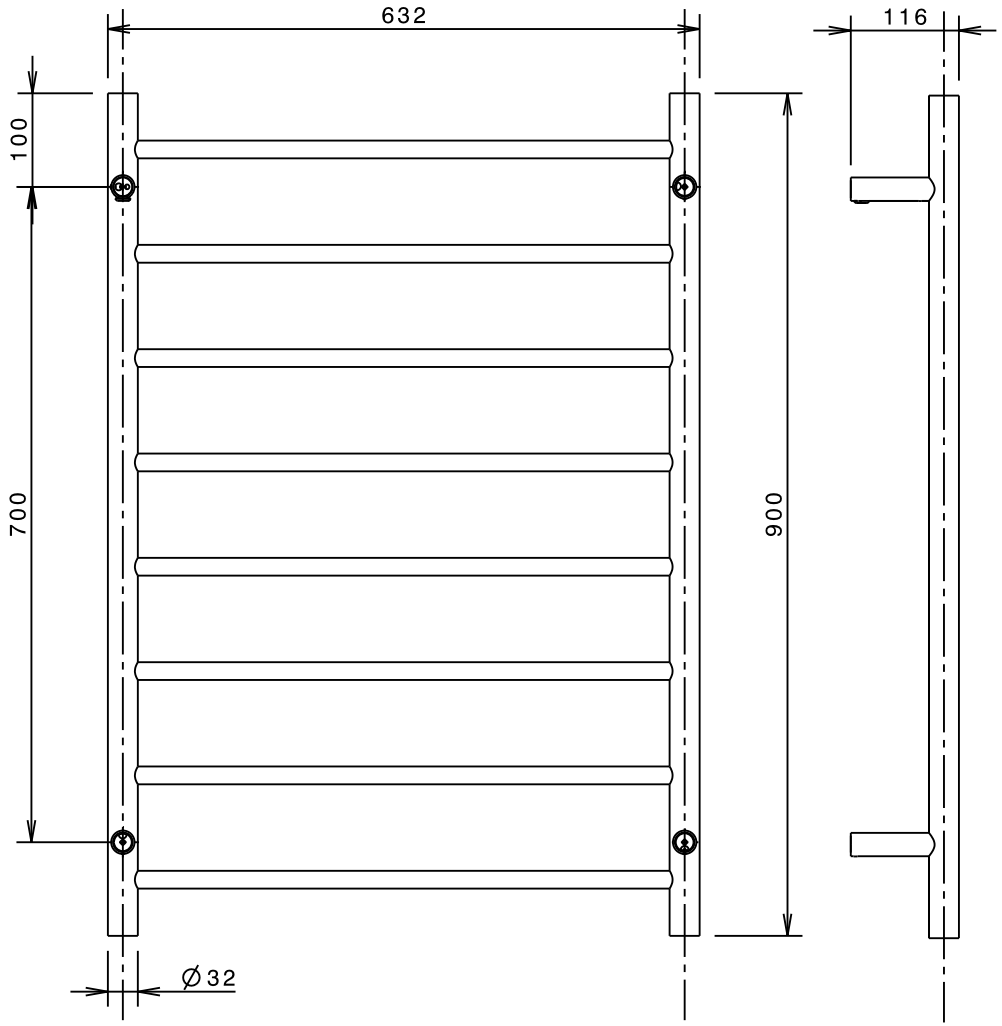
DIMENSIONS